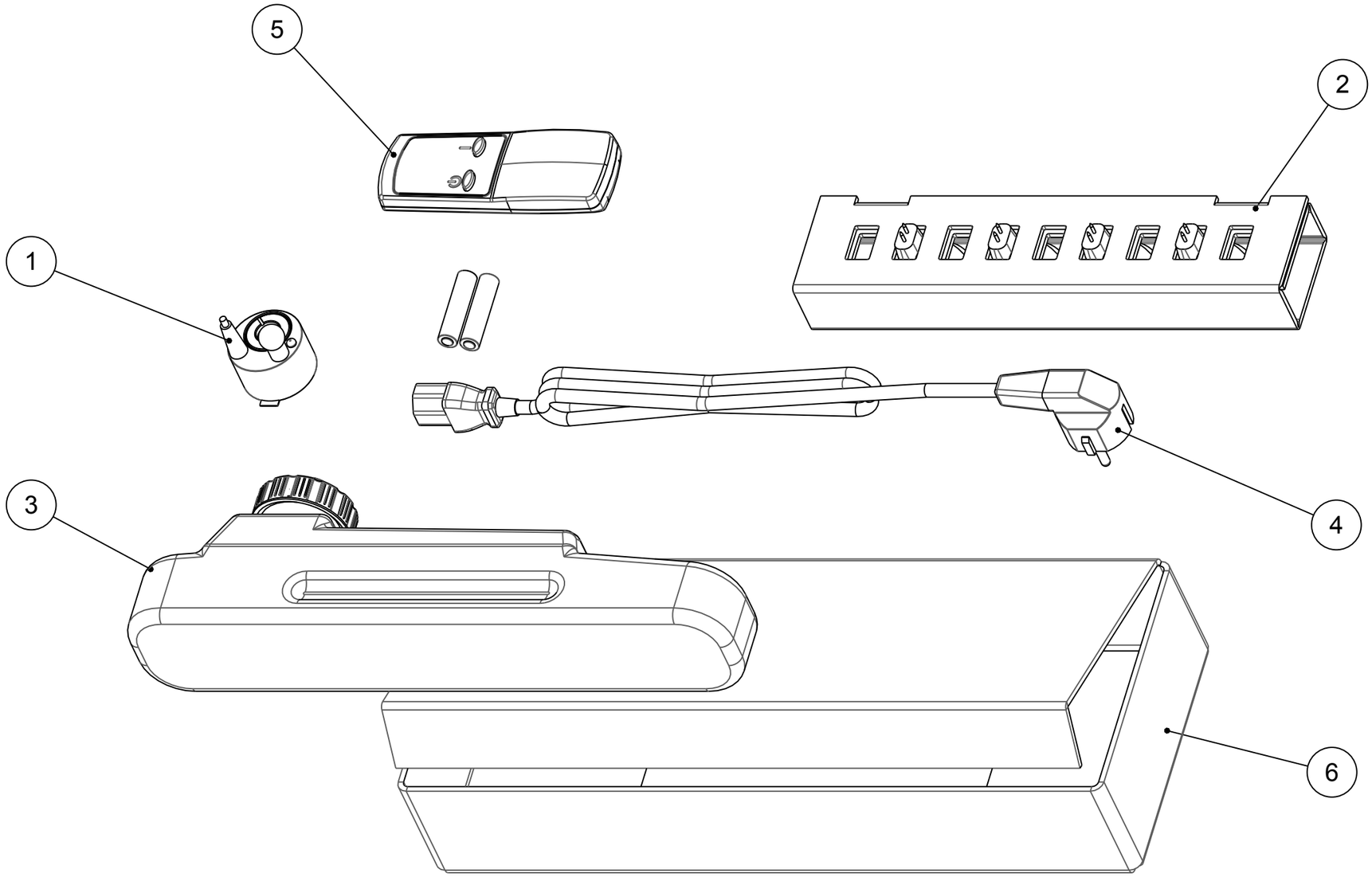

NO.	PART NO.	DESCRIPTION	QTY
1	1/69039/0	KERI TRANSDUCER	1
2	3/22614/0	BULB CARTON INSET	1
3	3/22866/0	BOTTLE + LID ASSEMBLY	1
4	3/22881/0	EU CORDSET	1
5	4/18805/5	Remote Accessory Pack	1
6	8/35590/0	Accessories Carton	1

GLEN DIMPLEX RESEARCH & DEVELOPMENT
Dunleer, Co.Louth, Ireland. Tel: ++353(0)41 6872200. Fax: ++353(0)41 6851464.

THIS DRAWING IS SUPPLIED IN CONFIDENCE AND THE COPYRIGHT THEREOF IS THE PROPERTY OF GLEN DIMPLEX : IT MUST NOT BE USED BY A THIRD PARTY WITHOUT PRIOR PERMISSION. ©2012

DRAWN BY	CL	A3	TITLE Accessory Pack - No Heat EU
SERIES	A		
SERIES DATE	9/07/12		
ISSUE	2		DRG NO 4/20121/3
PROJECT	Optimyst Fires		

OCN																		
DATE																		